Rear Assembly

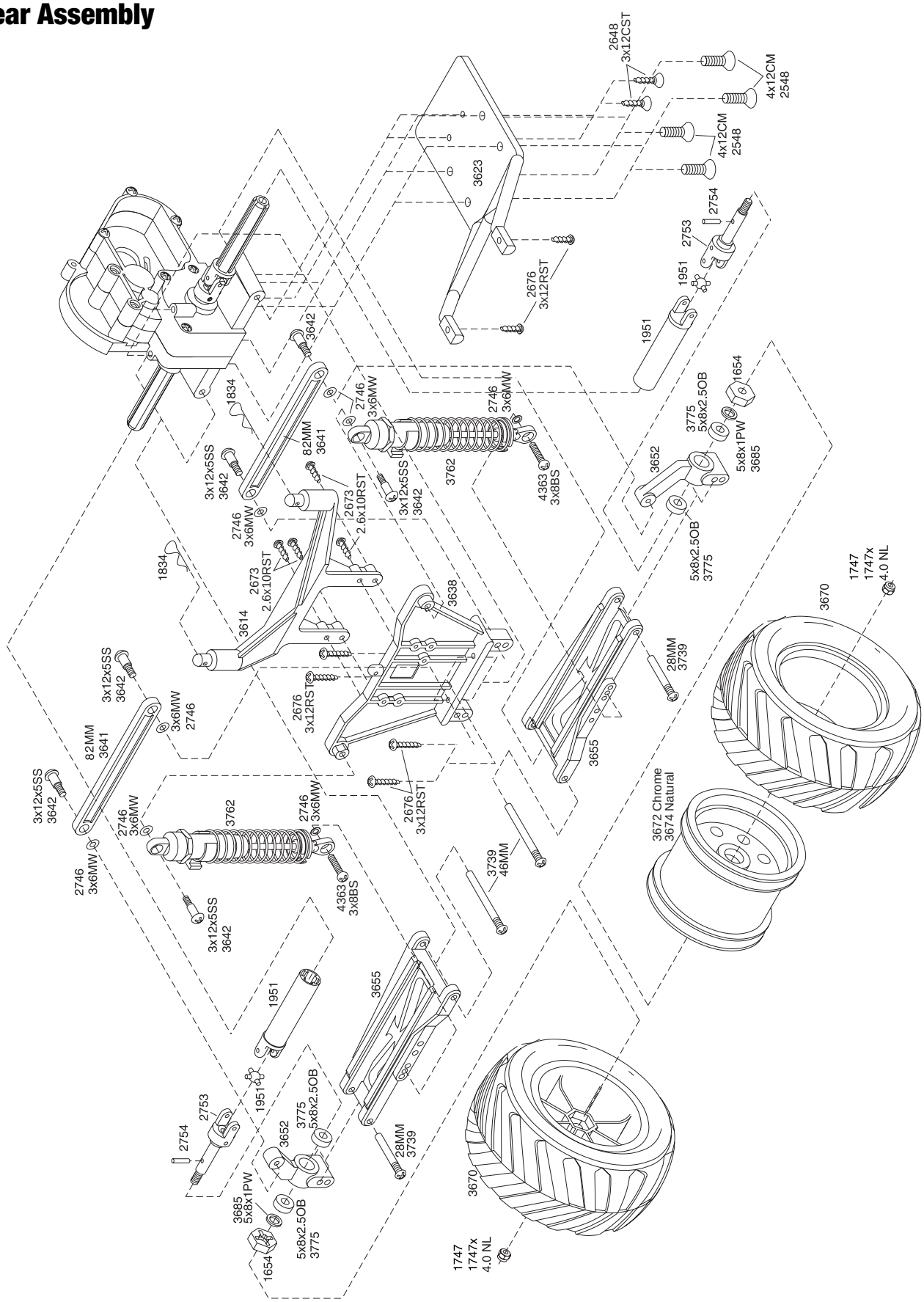

See front of manual for hardware abbreviations. Specifications subject to change.