Chassis Assembly

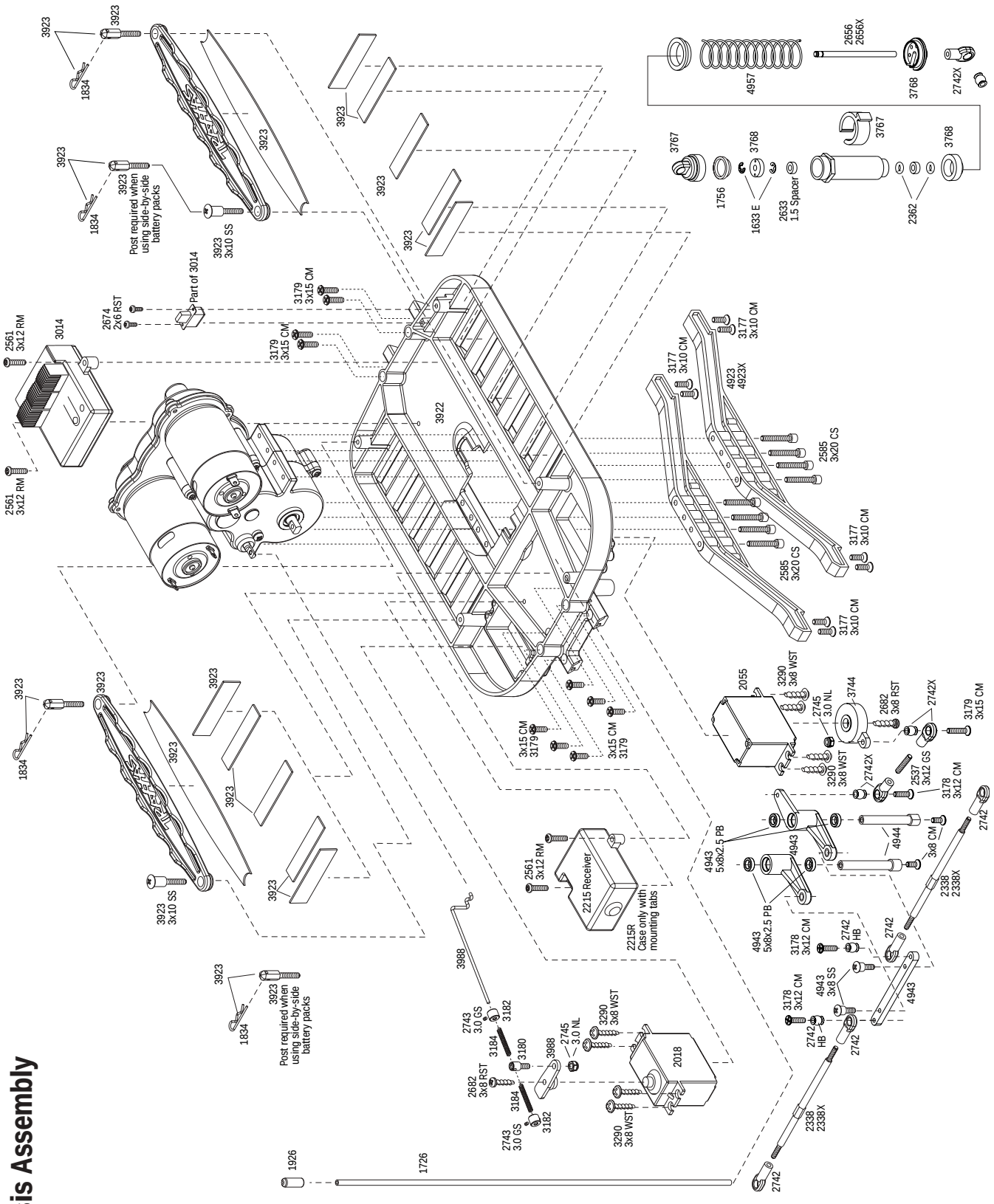
3923
1834
3923
3923
3923