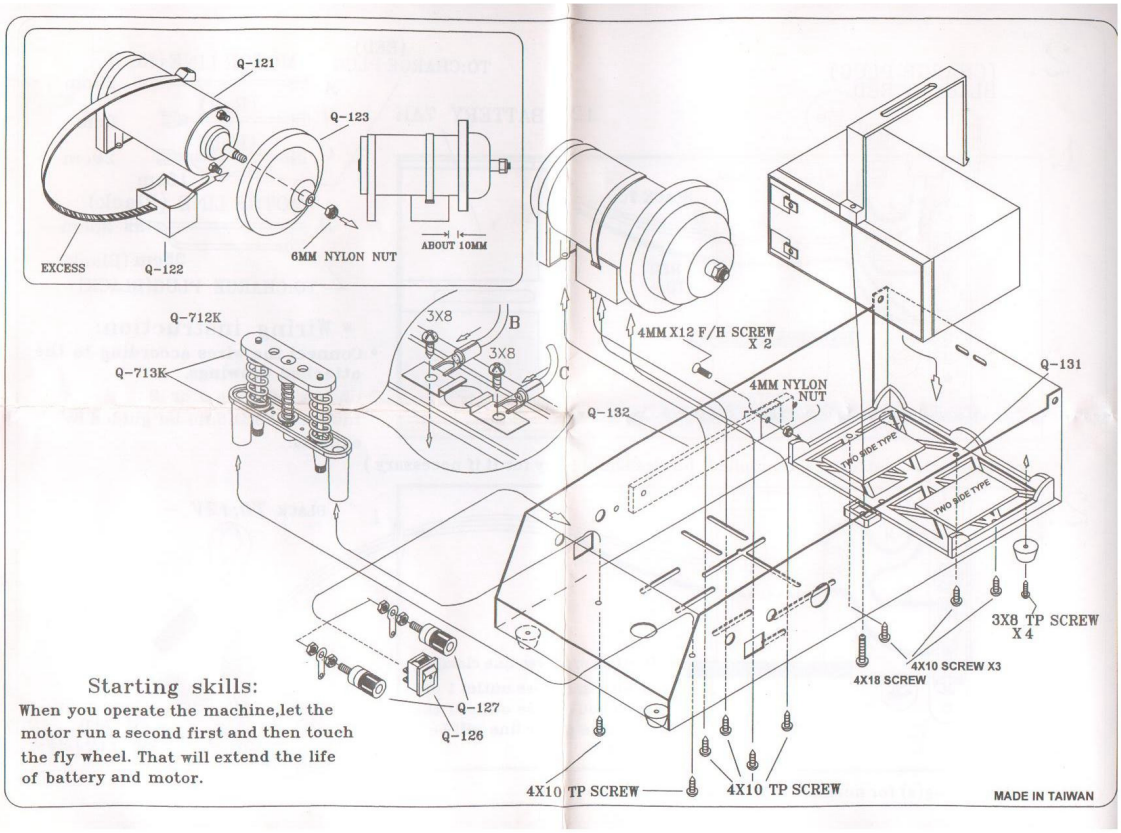

Starting skills:

When you operate the machine,let the motor run a second first and then touch the fly wheel. That will extend the life of battery and motor.

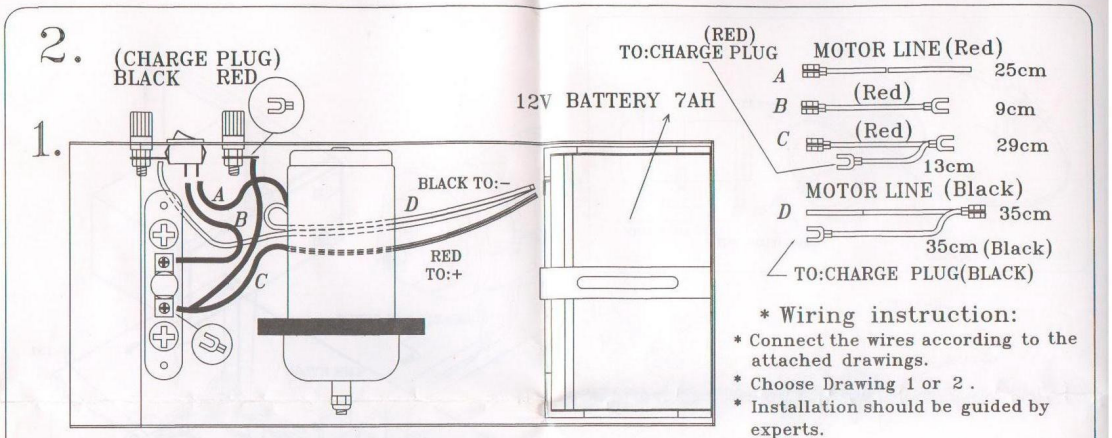

* Wiring instruction:

* Connect the wires according to the attached drawings.
* Choose Drawing 1 or 2 .
* Installation should be guided by experts.

Drawing for12V battery (Not supplied buyers should pay for it if necessary)

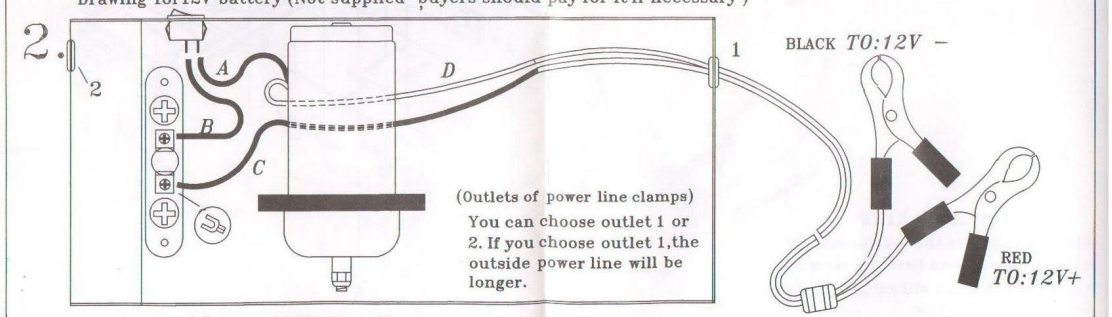

Drawing(s) for normal connection.