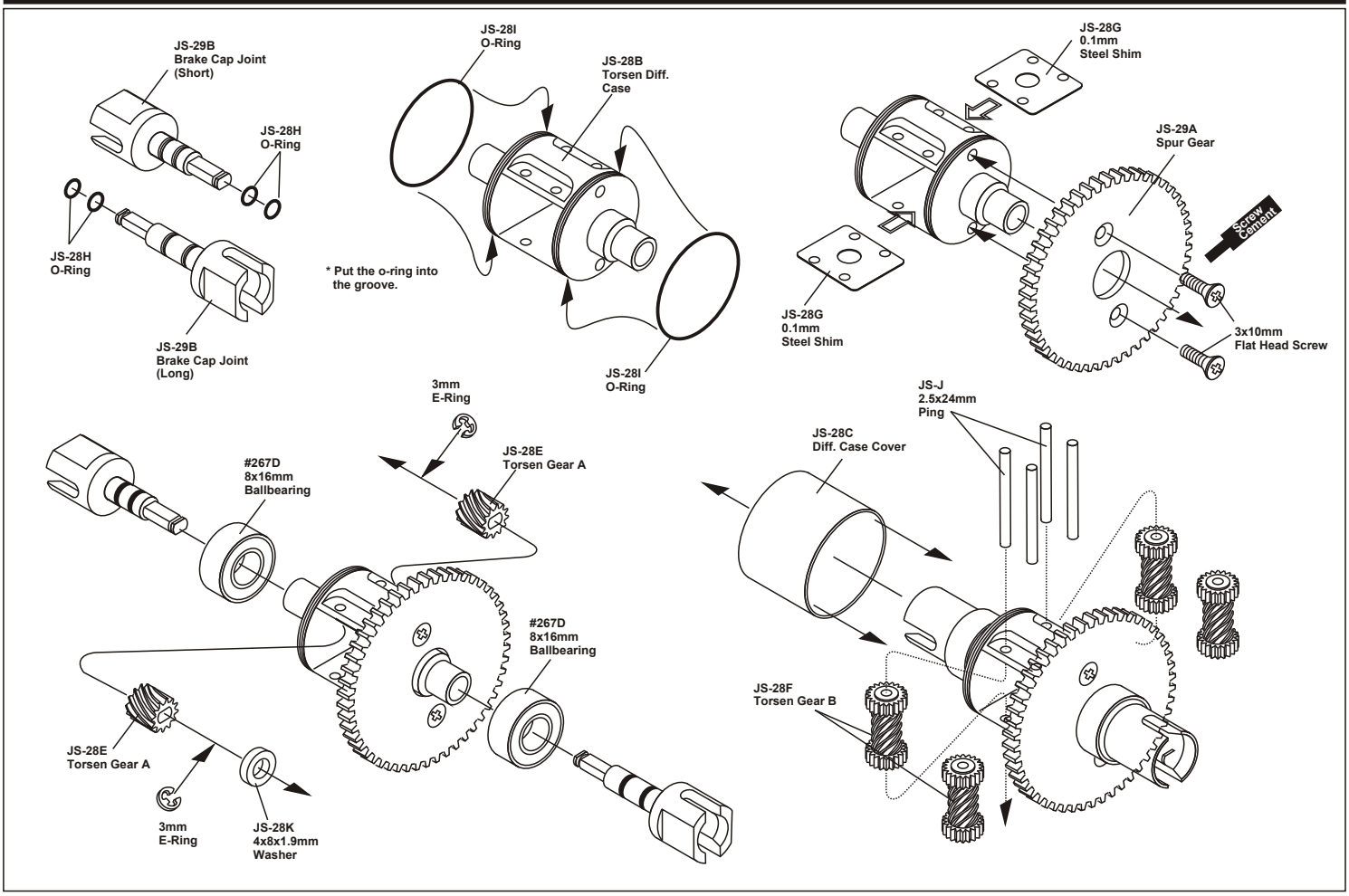JS-29 TORSEN DIFFERENTIAL
(For: HN-Speed 9.5 Center)